Cambridge Assessment International Education

# Cambridge International AS & A Level

CANDIDATE NAME

CENTRE NUMBER

CANDIDATE NUMBER

*T0169686139*

**PHYSICS** **9702/31**

Paper 3 Advanced Practical Skills 1 **May/June 2022**

**2 hours**

You must answer on the question paper.

You will need: The materials and apparatus listed in the confidential instructions

**INSTRUCTIONS**

- Answer **all** questions.
- Use a black or dark blue pen. You may use an HB pencil for any diagrams or graphs.
- Write your name, centre number and candidate number in the boxes at the top of the page.
- Write your answer to each question in the space provided.
- Do **not** use an erasable pen or correction fluid.
- Do **not** write on any bar codes.
- You will be allowed to work with the apparatus for a maximum of 1 hour for each question.
- You should record all your observations in the spaces provided in the question paper as soon as these observations are made.
- You may use a calculator.
- You should show all your working and use appropriate units.

**INFORMATION**

- The total mark for this paper is 40.
- The number of marks for each question or part question is shown in brackets [ ].

| For Examiner's Use | |
|---|---|
| 1 | |
| 2 | |
| Total | |

This document has **12** pages.


© UCLES 2022

**You may not need to use all of the materials provided.**

**1** In this experiment, you will investigate the motion of a spring system.

You have been provided with two springs connected by string.

**(a)** ● Set up the apparatus as shown in Fig. 1.1.

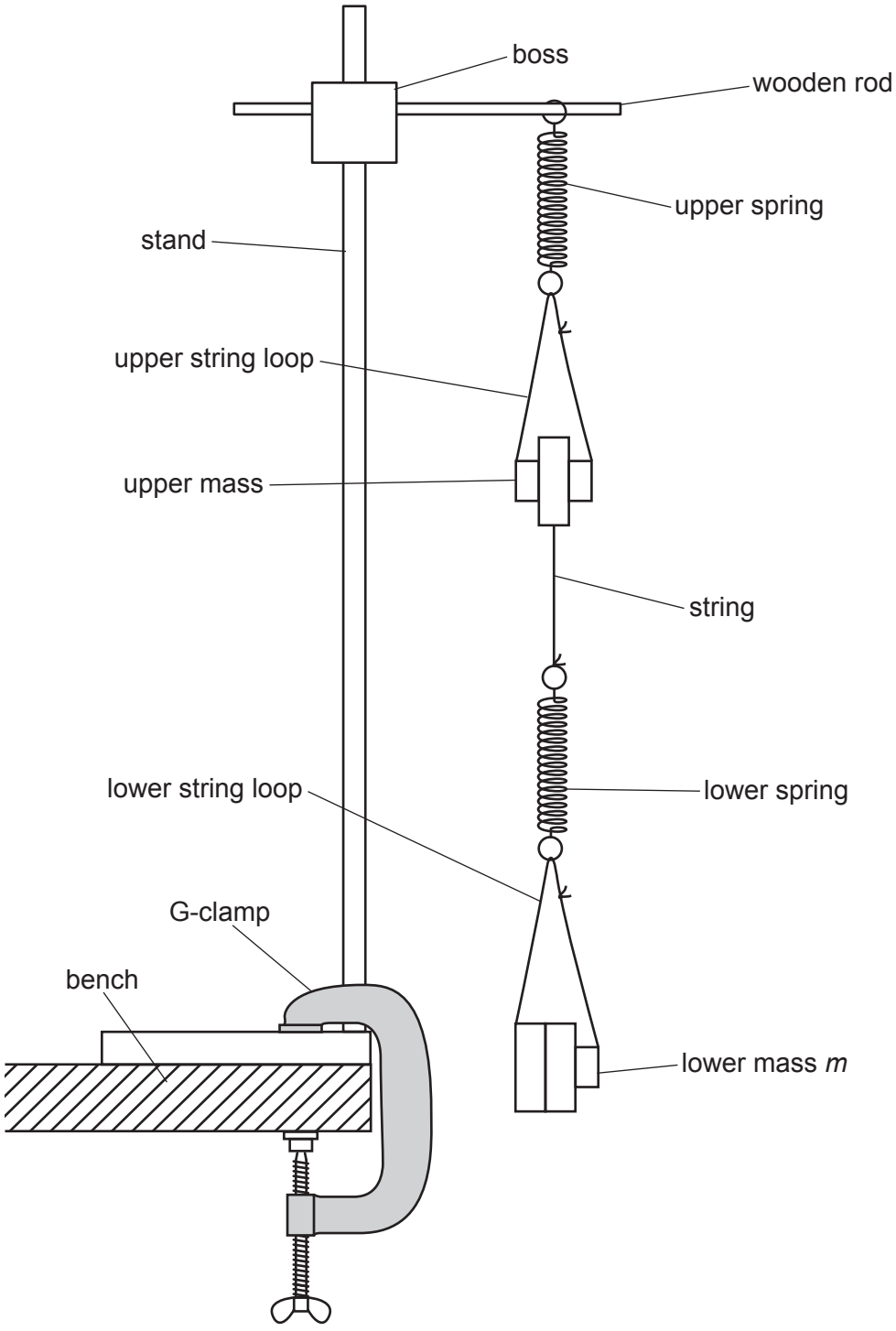


**Fig. 1.1**

- The lower mass is $m$. Arrange **all** of the slotted masses so that $m$ is 250 g and the remaining slotted masses are in the upper string loop.
- Pull the **lower** mass down through a short distance.
- Release the mass. The system will oscillate.
- Determine the period $T$ of the oscillations of the **upper** mass.

$T$ = ..... [2]

**(b)**
- Transfer some of the slotted masses from the lower string loop to the upper string loop.
- Record the value of the upper mass.

upper mass = .....

- Record the value of $m$.

$m$ = .....

- Determine the period $T$ of the oscillations of the **upper** mass.

$T$ = .....
[1]

**(c)** Change $m$ by moving slotted masses between the two string loops and then determine $T$.

Repeat until you have six sets of values of $m$ and $T$. You may include your results from **(a)** and **(b)**.

Record your results in a table. Include values of $\sqrt{T}$ in your table.

[9]

**(d)** **(i)** Plot a graph of $\sqrt{T}$ on the $y$-axis against $m$ on the $x$-axis. [3]

**(ii)** Draw the straight line of best fit. [1]

**(iii)** Determine the gradient and $y$-intercept of this line.

gradient = .....

$y$-intercept = .....
[2]

© UCLES 2022

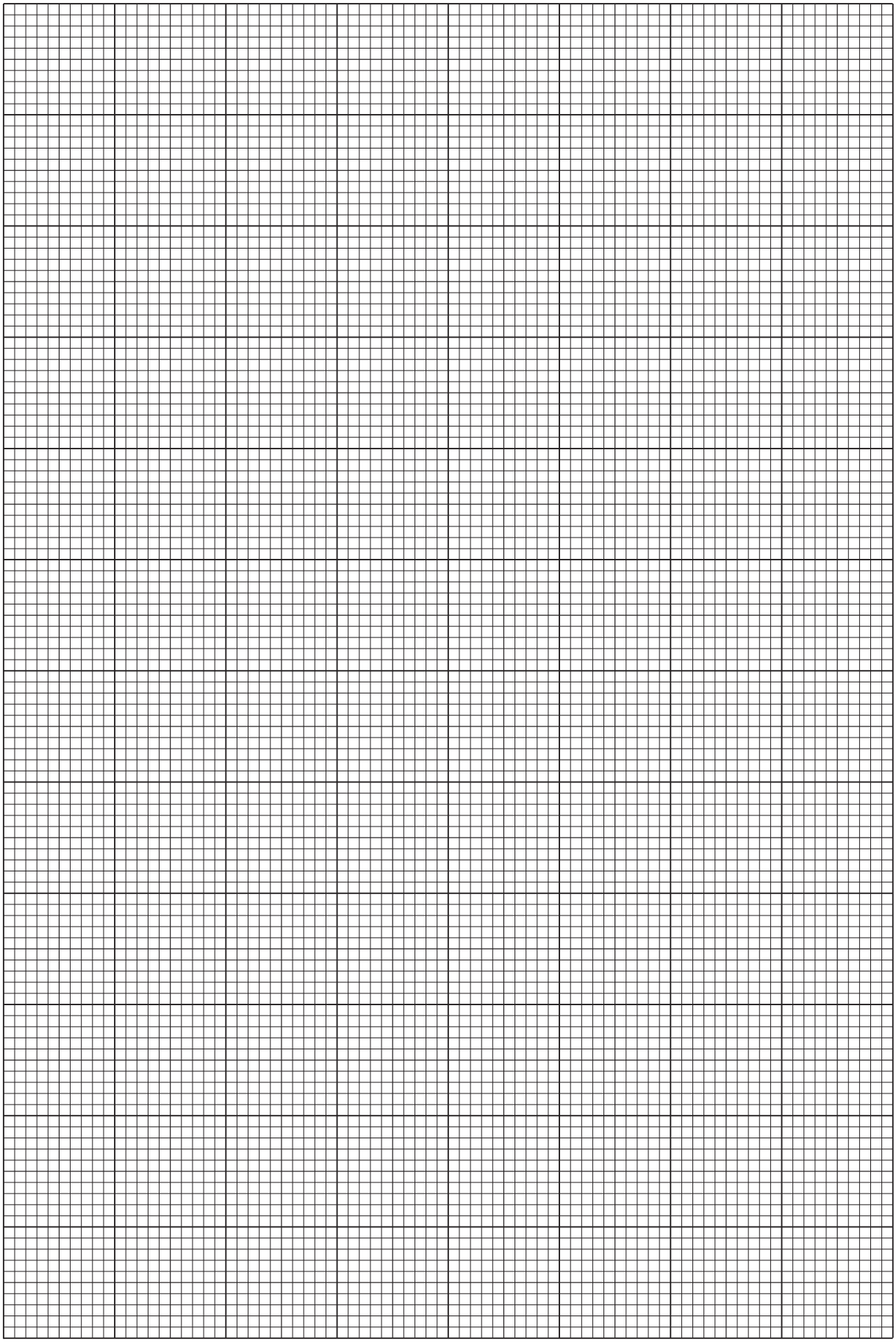

**(e)** It is suggested that the quantities $T$ and $m$ are related by the equation

$$\sqrt{T} = Pm + Q$$

where $P$ and $Q$ are constants.

Using your answers in **(d)(iii)**, determine the values of $P$ and $Q$.
Give appropriate units.

$P$ = .....

$Q$ = .....
[2]

[Total: 20]

**You may not need to use all of the materials provided.**

**2** In this experiment, you will investigate the equilibrium of a metre rule.

You have been provided with a metre rule and a tube.

**(a) (i)** • The distance between the centre of the hole in the metre rule and the 50 cm mark on the metre rule is $L$, as shown in Fig. 2.1.

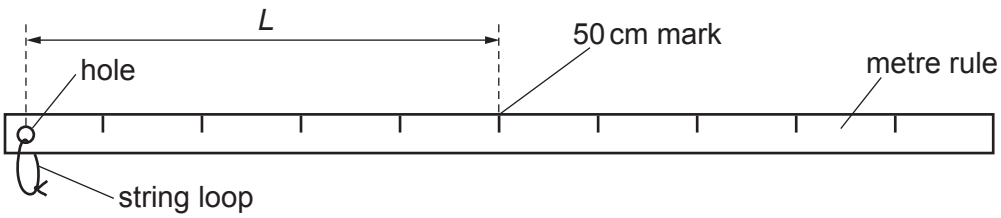


**Fig. 2.1**

Determine $L$. Give your value in metres.

$L$ = ..... m

• The outer diameter of the tube is $d$, as shown in Fig. 2.2.

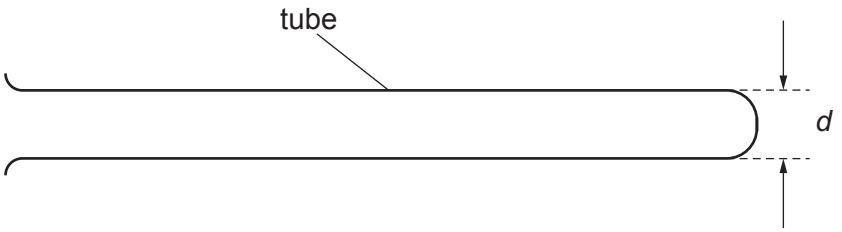


**Fig. 2.2**

Measure and record $d$. Give your value in metres.

$d$ = ..... m
[1]

**(ii)** Calculate the cross-sectional area $A$ of the tube where

$$A = \frac{\pi d^2}{4}.$$

$A$ = ..... $m^2$ [1]

**(b) (i)** ● Add sand to the tube as shown in Fig. 2.3.

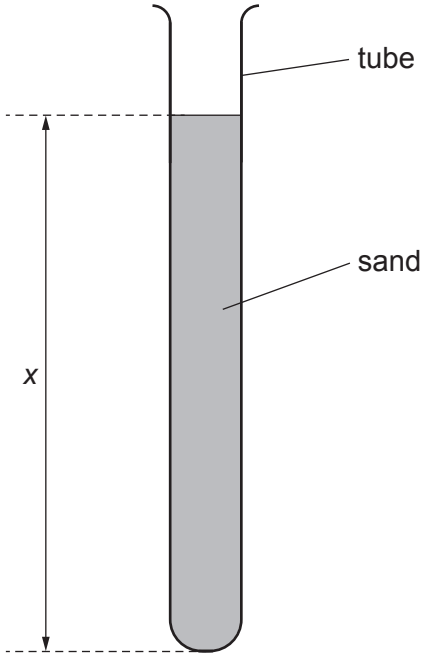


**Fig. 2.3**

● The height of sand in the tube is *x*.

Adjust the amount of sand in the tube until *x* is approximately 12 cm.

● Measure and record *x*. Give your value in metres.

*x* = ..... m

● Push the stopper securely into the tube.

© UCLES 2022

- Set up the apparatus as shown in Fig. 2.4. Place the beaker containing water inside the tray.

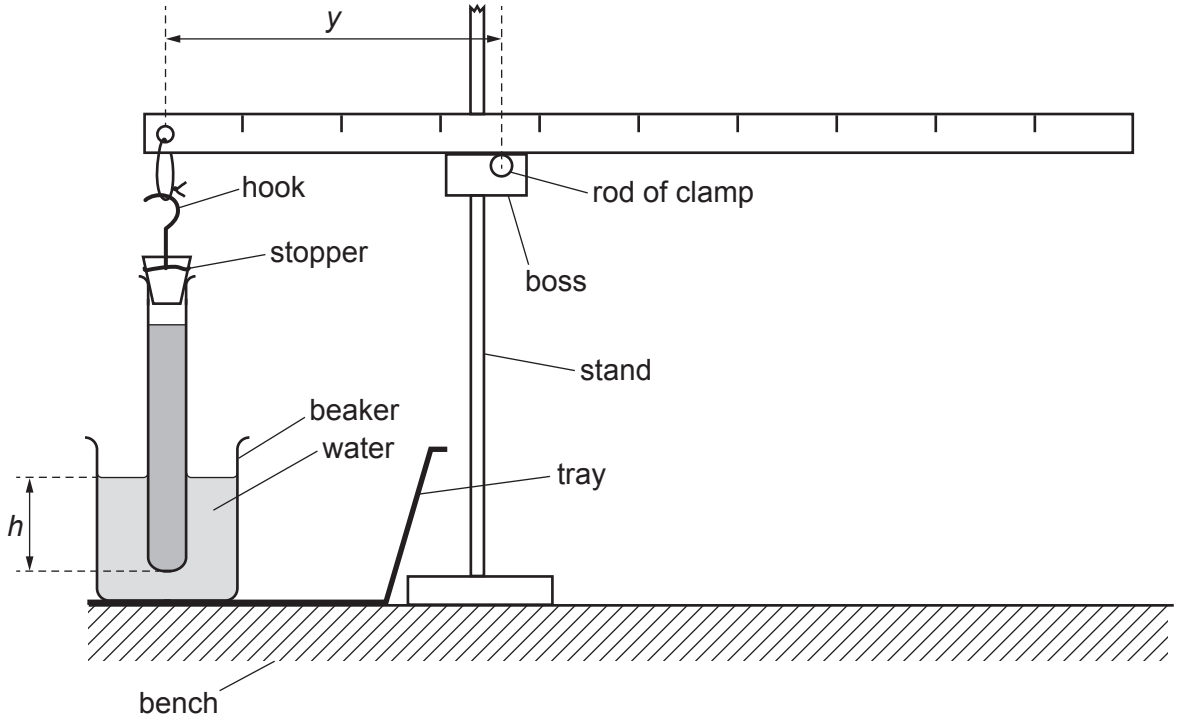


**Fig. 2.4** (not to scale)

- Using the hook, suspend the tube from the string loop and place the tube in the water.

- The distance between the bottom of the tube and the surface of the water in the beaker is *h*.

  Adjust the apparatus so that the rule is balanced on the rod of the clamp, the rule is parallel to the bench and the value of *h* is approximately 5 cm.

- The distance between the rod of the clamp and the hole in the rule is *y*.

  Measure and record *h* and *y*. Give your values in metres.

*h* = ..... m

*y* = ..... m
[2]

**(ii)** Estimate the percentage uncertainty in your value of $h$. Show your working.

percentage uncertainty = ..... % [1]

**(iii)** ● The mass $M$ of the metre rule and string is given on the card.

Write down the value of $M$.

$M$ = ..... kg

● Calculate $C$ using

$$C = \frac{1}{L}\left(1 - \frac{Ah\rho}{M}\right)$$

where $\rho = 1.0 \times 10^3\,\text{kg}\,\text{m}^{-3}$.

$C$ = ..... $\text{m}^{-1}$
[1]

**(iv)** Justify the number of significant figures that you have given for your value of $C$.

.....

.....

..... [1]

**(c)** ● Remove some of the sand from the tube so that $x$ is approximately 8 cm.

Measure and record $x$.

$x$ = ..... m

● Set up the apparatus as shown in Fig. 2.4.

● Adjust the apparatus so that the rule is parallel to the bench and $h$ has the same value as in **(b)(i)**.

● Measure and record $y$.

$y$ = ..... m
[3]

© UCLES 2022

**(d)** It is suggested that the relationship between $y$, $x$ and $C$ is

$$\frac{1}{y} = kx + C$$

where $k$ is a constant.

Using your data, calculate two values of $k$.

first value of $k$ = .....

second value of $k$ = .....
[1]

**(e)** It is suggested that the percentage uncertainty in the values of $k$ is 10%.

Using this uncertainty, explain whether your results support the relationship in **(d)**.

.....

.....

.....

..... [1]

**(f) (i)** Describe **four** sources of uncertainty or limitations of the procedure for this experiment.

For any uncertainties in measurement that you describe, you should state the quantity being measured and a reason for the uncertainty.

1 .....

.....

2 .....

.....

3 .....

.....

4 .....

.....

[4]

**(ii)** Describe **four** improvements that could be made to this experiment. You may suggest the use of other apparatus or different procedures.

1 .....

.....

2 .....

.....

3 .....

.....

4 .....

.....

[4]

[Total: 20]

Permission to reproduce items where third-party owned material protected by copyright is included has been sought and cleared where possible. Every reasonable effort has been made by the publisher (UCLES) to trace copyright holders, but if any items requiring clearance have unwittingly been included, the publisher will be pleased to make amends at the earliest possible opportunity.

To avoid the issue of disclosure of answer-related information to candidates, all copyright acknowledgements are reproduced online in the Cambridge Assessment International Education Copyright Acknowledgements Booklet. This is produced for each series of examinations and is freely available to download at www.cambridgeinternational.org after the live examination series.

Cambridge Assessment International Education is part of Cambridge Assessment. Cambridge Assessment is the brand name of the University of Cambridge Local Examinations Syndicate (UCLES), which is a department of the University of Cambridge.